ME551 Vibrations in Linear Systems

Lecture 5

Principles of Dynamics 2

Chap 2. Principles of Newtonian and Analytical Dynamics

2.1 Newton's Second Law of Motion
2.2 Characteristics of Mechanical Components
2.3 Differential Equations of Motion for 1st-Order and 2nd-Order Systems
2.4 Moment of a Force and Angular Momentum
2.5 Work and Energy
2.6 Systems of Particles and Rigid Bodies
2.7 **Generalized Coordinates** and Degrees of Freedom
2.8 **Principle of Virtual Work** (Static Equilibrium)
2.9 Generalized Principle of D'Alembert (Dynamic Equilibrium)
2.10 Hamilton's Principle
2.11 Lagrange's Equation of Motion
2.12 Hamilton's Equations
2.13 Conservation Laws

© Prof. Yong-Hwa Park, KAIST

Physical coordinates v.s. Generalized Coordinates

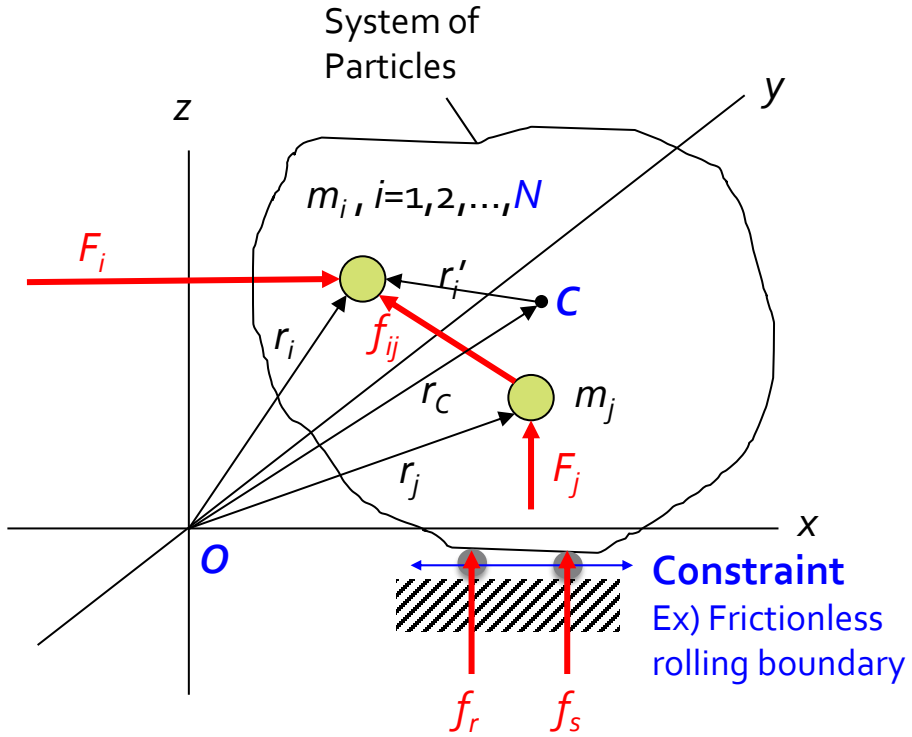

$$f(x_1, y_1, z_1, x_2, \ldots, z_N, t) = C$$

$$\boldsymbol{r}_i = x_i \boldsymbol{i} + y_i \boldsymbol{j} + z_i \boldsymbol{k},\ i = 1, 2, \ldots, N$$

Physical Coordinates

$$x_1 = x_1(q_1, q_2, \ldots, q_n)$$
$$y_1 = y_1(q_1, q_2, \ldots, q_n)$$
$$z_1 = z_1(q_1, q_2, \ldots, q_n)$$
$$x_2 = x_2(q_1, q_2, \ldots, q_n)$$
$$\cdots\cdots\cdots\cdots\cdots\cdots$$
$$z_N = z_N(\underbrace{q_1, q_2, \ldots, q_n}_{\text{Generalized Coordinates}})$$

$$n = 3N - c$$

3N Physical coordinates,
n Degree of Freedom (DOF),
c Constraints

What coordinate system would you use to formulate equations of motion of the system? It is upon your choice!

© Prof. Yong-Hwa Park, KAIST

2.7 Generalized Coordinates and Degrees of Freedom

- Physical coordinates (vector space) vs. generalized coordinates (algebra)
- Generalized coordinates, which may be abstract and not unique, are required to be independent of each other in this text.
- A process of transition from vector mechanics to analytical mechanics.
- Number of DOF: A minimum number of independent coordinates to describe the motion (configuration) of a system completely or number of generalized coordinates.

© Prof. Yong-Hwa Park, KAIST

Example: double pendulum in plane motion in 3D-space

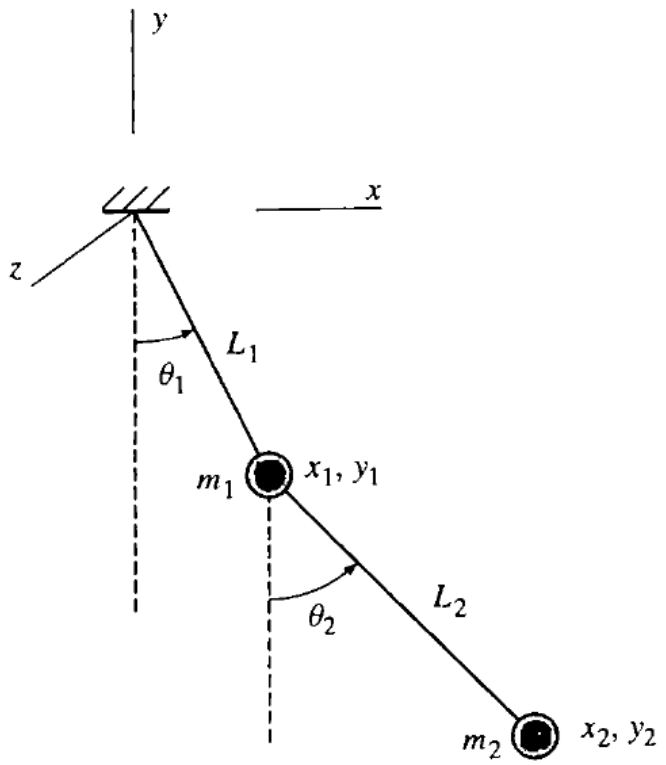

Figure 2.16 Double pendulum

Physical coordinates (N) =

No. of Constraints (c) =

Degree of Freedom (DOF) =

Generalized Coordinates =

© Prof. Yong-Hwa Park, KAIST

Example: double pendulum in plane motion in 3D-space

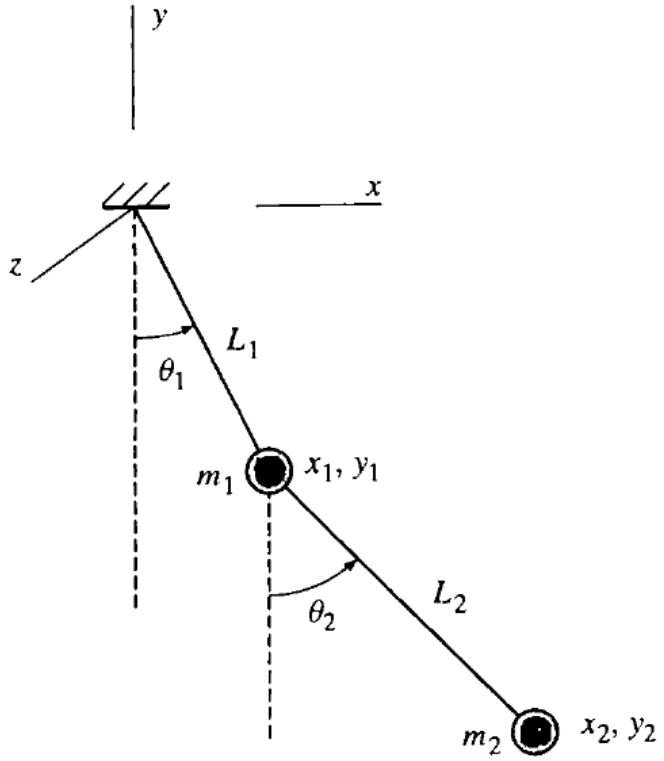

Figure 2.16 Double pendulum

Physical coordinates (N) = $x_1, y_1, z_1, x_2, y_2, z_2$ (6)

$$x_1^2 + y_1^2 = L_1^2$$
$$(x_2 - x_1)^2 + (y_2 - y_1)^2 = L_2^2$$
$$z_1 = 0, z_2 = 0$$

No. of Constraints (c) = 4

Degree of Freedom (DOF) = 6-4=2

Generalized Coordinates $= q_1, q_2 = \theta_1, \theta_2$

$$x_1 = L_1 \sin q_1,\ y_1 = -L_1 \cos q_1,\ z_1 = 0$$
$$x_2 = L_1 \sin q_1 + L_2 \sin q_2,\ y_1 = -L_1 \cos q_1 - L_2 \cos q_2,\ z_2 = 0$$

© Prof. Yong-Hwa Park, KAIST

Coordinates for Equation of Motion (Ex. 2.4, 2.5)

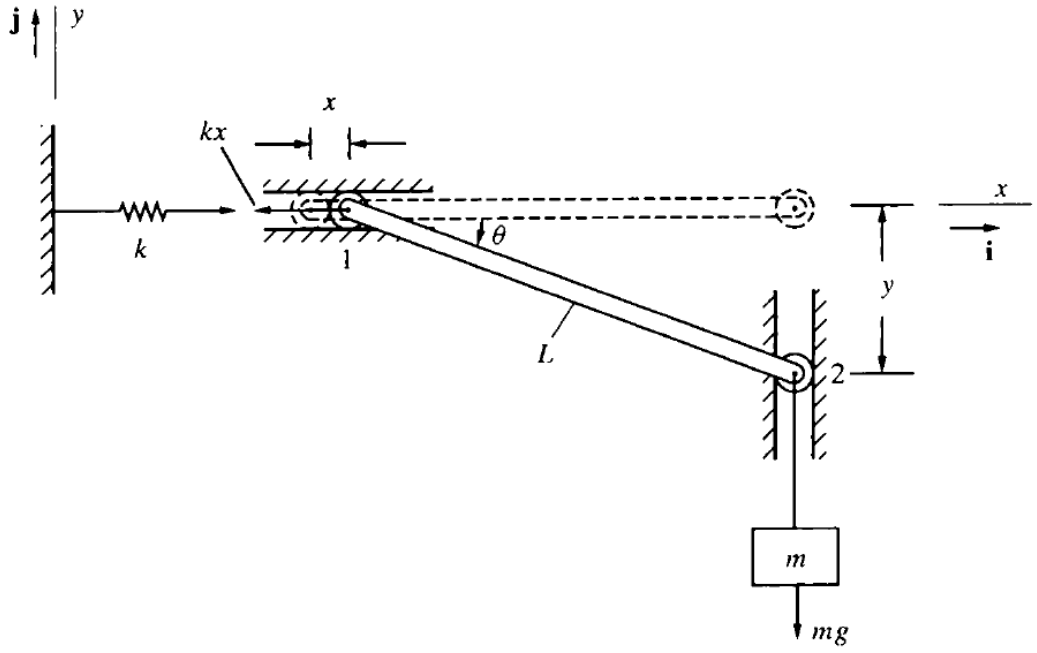

Figure 2.17 Constrained system in equilibrium

1. What is the DOF of this system?
2. What coordinate(s) would you use to formulate equation(s) of motion for this *m*-*k* system?

© Prof. Yong-Hwa Park, KAIST

2.8 Virtual Displacements and Principle of Virtual Work

- **Virtual Displacements ($\delta \boldsymbol{r}_i$, $i = 1, 2, \ldots, N$):** Arbitrarily imagined infinitesimal changes in the configuration of a system, consistent with the constraints of the system.
- The virtual displacements are not true (i.e., not physical displacement obeying the Newton's 2nd Law) but small, instantaneous variations resulting from imaging the system in a slightly displaced position, so that the <u>forces and constraints are not changed during this process</u>.
- Symbol δ (cf. d for actual differentials) by Lagrange
- The virtual displacements, as infinitesimal, should obey the rules of differential calculus (chain rule).
- A gateway from Newtonian Dynamics to Analytical Dynamics.

© Prof. Yong-Hwa Park, KAIST

Example of Virtual Displacement:

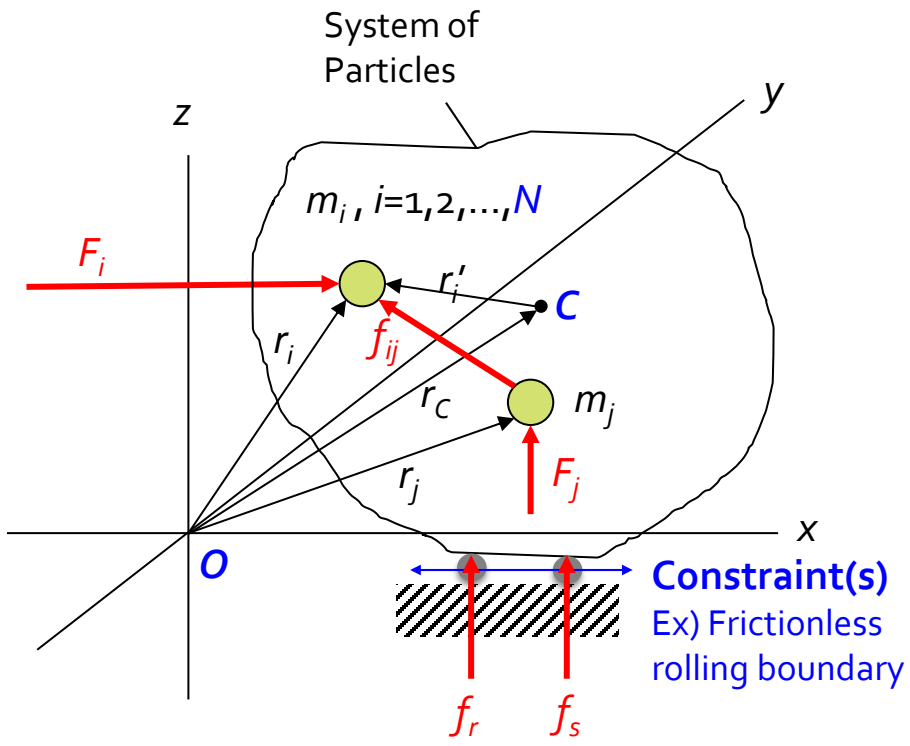

$$f(x_1, y_1, z_1, x_2, \ldots, z_N, t) = C$$

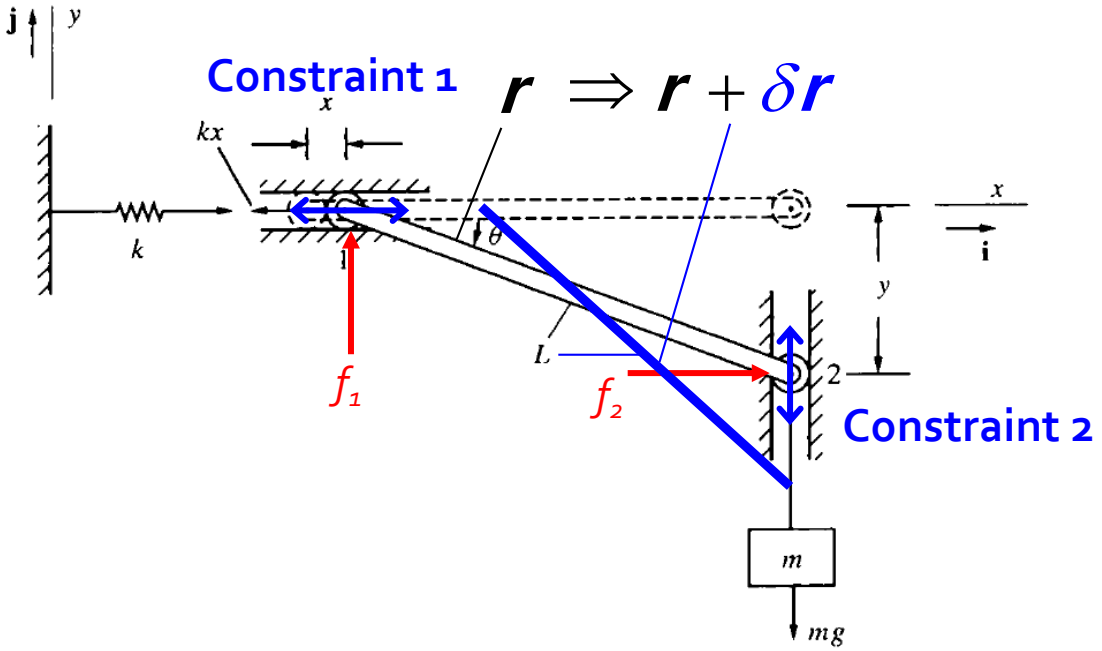

Figure 2.17 Constrained system in equilibrium

Note 1) For the virtual displacement, the *ideal constraint force does not make work* since both are orthogonal! $\boldsymbol{f}_i \cdot \delta \boldsymbol{r}_i = 0$

Note 2) Constraint equation for virtual displacement:

$$f(x_1 + \delta x_1, y_1 + \delta y_1, z_1 + \delta z_1, x_2 + \delta x_2, \ldots, z_N + \delta z_N, t) = C \quad \Rightarrow f(x_1, y_1, z_1, x_2, \ldots, z_N, t) + \sum_{i=1}^{N} \left(\frac{\partial f}{\partial x_i} \delta x_i + \frac{\partial f}{\partial y_i} \delta y_i + \frac{\partial f}{\partial z_i} \delta z_i \right) + O(\delta^2) = C \quad \Rightarrow \sum_{i=1}^{N} \left(\frac{\partial f}{\partial x_i} \delta x_i + \frac{\partial f}{\partial y_i} \delta y_i + \frac{\partial f}{\partial z_i} \delta z_i \right) = 0$$

© Prof. Yong-Hwa Park, KAIST

Principle of Virtual Work (in static equilibrium)

For an i-th particle of a system of N particles in static equilibrium subject to an external force ($\boldsymbol{F}_i$), an ideal constraint force ($\boldsymbol{f}_i$), and internal forces ($\boldsymbol{f}_{ij}$), sum of all forces must be zero.

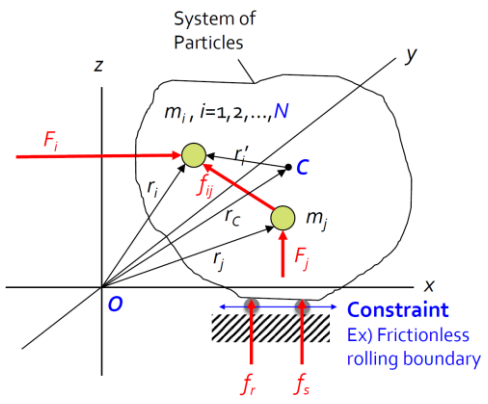

$$f(x_1, y_1, z_1, x_2, \ldots, z_N, t) = C$$

$$\sum_{i=1}^{N}\left(\frac{\partial f}{\partial x_i}\delta x_i + \frac{\partial f}{\partial y_i}\delta y_i + \frac{\partial f}{\partial z_i}\delta z_i\right) = 0$$

$$\boldsymbol{R}_i = \boldsymbol{F}_i + \boldsymbol{f}_i + \sum_{\substack{j=1\\ j\neq i}}^{N} \boldsymbol{f}_{ij} = 0, i = 1,2,\ldots,N \quad : \textit{in Static Equilibrium}$$

$$\overline{\delta W}_i = \boldsymbol{R}_i \cdot \delta \boldsymbol{r}_i = 0 : \textit{Work done by virtual displacement is zero}$$

$\downarrow\Leftarrow$ Sum over i for all particles

$$\overline{\delta W} = \sum_{i=1}^{N} \boldsymbol{R}_i \cdot \delta \boldsymbol{r}_i = \sum_{i=1}^{N} \boldsymbol{F}_i \cdot \delta \boldsymbol{r}_i + \sum_{i=1}^{N} \boldsymbol{f}_i \cdot \delta \boldsymbol{r}_i + \sum_{i=1}^{N}\sum_{\substack{j=1\\ j\neq i}}^{N} \boldsymbol{f}_{ij} \cdot \delta \boldsymbol{r}_i = 0$$

$$\downarrow\Leftarrow \begin{cases} \boldsymbol{f}_i \cdot \delta \boldsymbol{r}_i = 0 \because \text{reaction force at constraint and virtual displacement } \textit{are orthogonal} \\ \displaystyle\sum_{i=1}^{N}\sum_{\substack{j=1\\ j\neq i}}^{N} \boldsymbol{f}_{ij} \cdot \delta \boldsymbol{r}_i = 0 \because \textit{anction \& reaction (Newton's 3rd Law)} \end{cases}$$

$$\overline{\delta W} = \sum_{i=1}^{N} \boldsymbol{F}_i \cdot \delta \boldsymbol{r}_i = 0$$

© Prof. Yong-Hwa Park, KAIST

Generalized Principle of Virtual Work

: Combining Principle of Virtual Work with Generalized Coordinates!

$$\overline{\delta W} = \sum_{i=1}^{N} \boldsymbol{F}_i \cdot \delta \boldsymbol{r}_i = 0$$

$$\downarrow \Leftarrow \boldsymbol{r}_i = \boldsymbol{r}_i\left(q_1, q_2, \ldots, q_n\right); \delta \boldsymbol{r}_i = \sum_{j=1}^{n} \frac{\partial \boldsymbol{r}_i}{\partial q_j} \delta q_j$$

$$= \sum_{j=1}^{n} \underbrace{\left(\sum_{i=1}^{N} \boldsymbol{F}_i \cdot \frac{\partial \boldsymbol{r}_i}{\partial q_j} \right)}_{\equiv Q_j} \delta q_j = \sum_{j=1}^{n} Q_j \delta q_j = 0$$

$$\downarrow \Leftarrow \textit{independence of } \delta q_j$$

$Q_j = 0, j = 1, 2, \ldots, n$: Generalized forces,

n independent Equations of Motion

© Prof. Yong-Hwa Park, KAIST

Ex. 2.4: Static Equilibrium Problem

(By both statics approach and principle of virtual work)

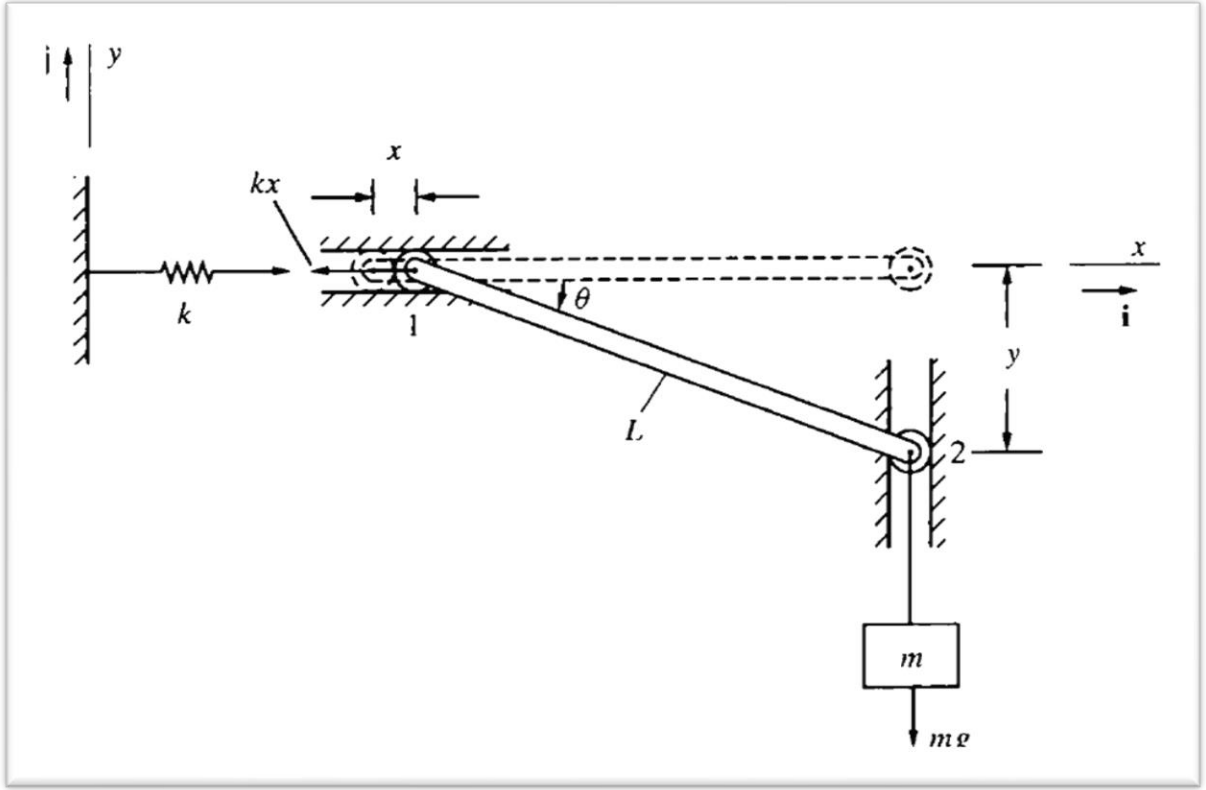

Bar: massless

x =o when θ =o.

Problem:

θ =? at static equilibrium

© Prof. Yong-Hwa Park, KAIST

Approach 1: By **statics equilibrium** (Given: k, m, L, g, Obtain : θ)

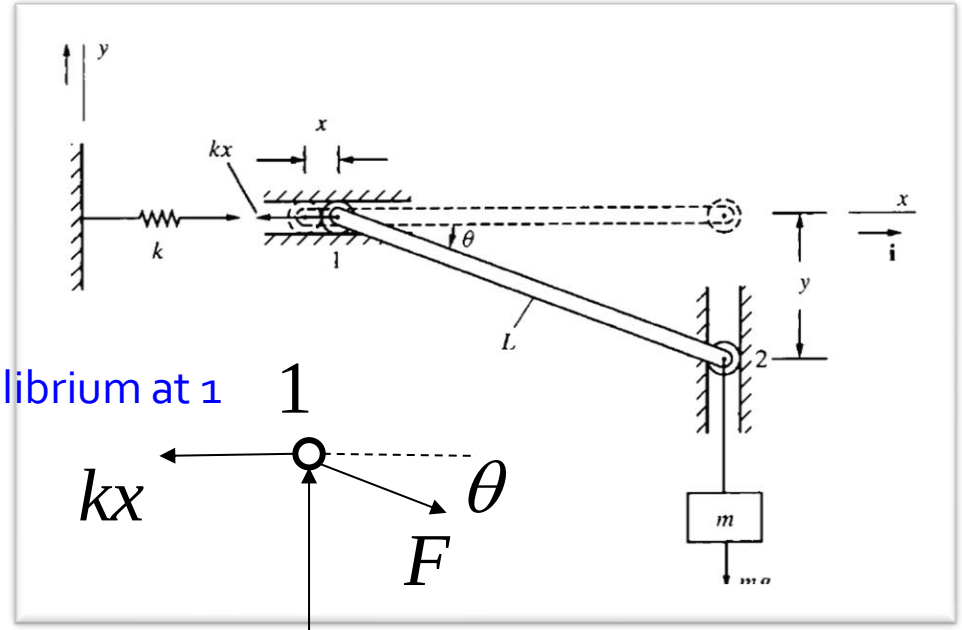

Equilibrium at 1

N_1

$$\begin{cases} F\cos\theta - kx = 0 \\ N_1 - F\sin\theta = 0 \end{cases}$$

Geometric constraint:

$$x = L(1-\cos\theta)$$

Equilibrium at 2

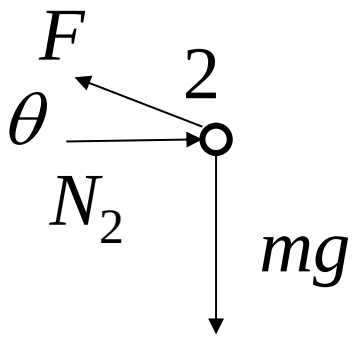

$$\begin{cases} N_2 - F\cos\theta = 0 \\ F\sin\theta - mg = 0 \end{cases}$$

$$\begin{cases} F\cos\theta - kx = 0 \\ N_1 - F\sin\theta = 0 \\ N_2 - F\cos\theta = 0 \\ F\sin\theta - mg = 0 \\ \downarrow \Leftarrow x = L(1-\cos\theta) \\ \dfrac{\sin\theta(1-\cos\theta)}{\cos\theta} = \dfrac{mg}{kL} \\ \downarrow \\ F = \dfrac{mg}{\sin\theta_0} \\ N_1 = mg \\ N_2 = \dfrac{mg}{\tan\theta_0} \\ x_0 = L(1-\cos\theta_0) \\ y_0 = -L\sin\theta_0 \end{cases}$$

How many equations and unknowns do we have?
Then, what would we do?

© Prof. Yong-Hwa Park, KAIST

Approach 2: By **Principle of Virtual Work** (Given: k, m, L, g, Obtain: θ)

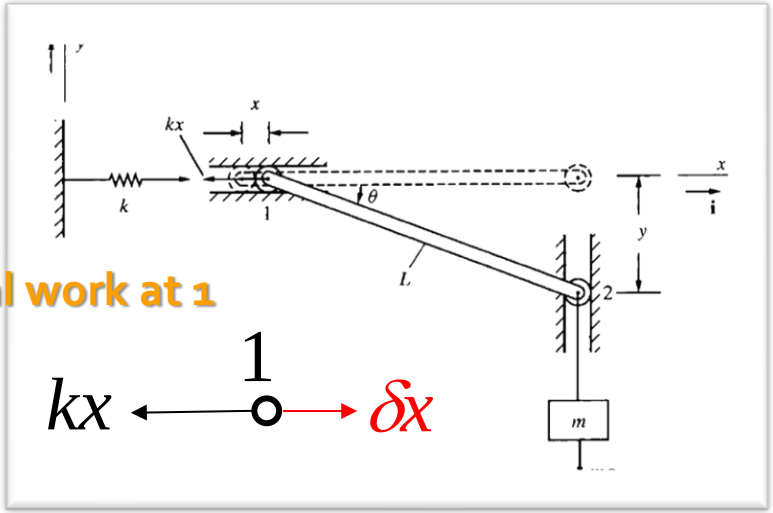

$$\mathbf{F}_1 = -kx\mathbf{i}$$

$$\delta\mathbf{r}_1 = \delta x\mathbf{i}$$

Virtual work at 2

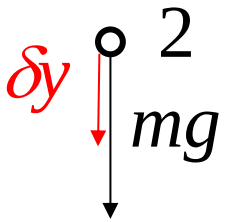

$$\mathbf{F}_2 = -mg\mathbf{j}$$

$$\delta\mathbf{r}_2 = -\delta y\mathbf{j}$$

$$\delta W = \sum_{i=1}^{2} \mathbf{F}_i \cdot \delta\mathbf{r}_j = -kx\delta x + mg\delta y = 0$$

$$\downarrow \Leftarrow \begin{cases} \delta x = L\sin\theta\delta\theta \\ \delta y = L\cos\theta\delta\theta \end{cases} \Leftarrow \begin{cases} x = L(1-\cos\theta) \\ y = L\sin\theta \end{cases}$$

$$\Rightarrow \left\{-kL^2(1-\cos\theta)\sin\theta + mgL\cos\theta\right\}\delta\theta = 0$$

$$\Rightarrow \frac{\sin\theta(1-\cos\theta)}{\cos\theta} = \frac{mg}{kL}$$

How many equations and unknowns do we have now?

Did we have to include the internal force f_{ij}, *and constraint forces* N_1, N_2?

© Prof. Yong-Hwa Park, KAIST

2.9 Generalized Principle of D'Alembert =Principle of Virtual Work in dynamic equilibrium

$$\boldsymbol{F}_i + \boldsymbol{f}_i + \sum_{\substack{j=1 \\ j\neq i}}^{N} \boldsymbol{f}_{ij} = m_i \ddot{\boldsymbol{r}}_i, i = 1,2,\ldots,N$$: Newton's second law

$\downarrow\Leftarrow$ Dynamic equilibrium by adding inertia force $\left(-m_i \ddot{\boldsymbol{r}}_i\right)$

$$\boldsymbol{F}_i + \boldsymbol{f}_i + \sum_{\substack{j=1 \\ j\neq i}}^{N} \boldsymbol{f}_{ij} - m_i \ddot{\boldsymbol{r}}_i = 0$$: D'Alembert's principle (*dynamic equilibrium*)

$\downarrow\Leftarrow$ Expansion of Principle of Virtual Work ($\sum_{i=1}^{N} \boldsymbol{F}_i \cdot \delta \boldsymbol{r}_i = 0$) to dynamic equilibrium

$$\sum_{i=1}^{N} \left(\boldsymbol{F}_i - m_i \ddot{\boldsymbol{r}}_i\right) \cdot \delta \boldsymbol{r}_i = 0$$

$\downarrow\Leftarrow$ $\boldsymbol{r}_i = \boldsymbol{r}_i\left(q_1, q_2, \ldots, q_n, t\right); \delta \boldsymbol{r}_i = \sum_{j=1}^{n} \frac{\partial \boldsymbol{r}_i}{\partial q_j} \delta q_j$

$$\sum_{j=1}^{n} \left(\sum_{i=1}^{N} \left(\boldsymbol{F}_i - m_i \ddot{\boldsymbol{r}}_i\right) \cdot \frac{\partial \boldsymbol{r}_i}{\partial q_j} \right) \delta q_j = 0$$: Generalized principle of D'Alembert

$\downarrow\Leftarrow$ $\sum_{i=1}^{N} \boldsymbol{F}_i \cdot \frac{\partial \boldsymbol{r}_i}{\partial q_j} \equiv Q_j; \sum_{i=1}^{N} \left(-m_i \ddot{\boldsymbol{r}}_i\right) \cdot \frac{\partial \boldsymbol{r}_i}{\partial q_j} \equiv Q_j^*$

$$\sum_{j=1}^{n} \left(Q_j + Q_j^*\right) \delta q_j = 0$$

$\downarrow\Leftarrow$ Independence of δq_j's

$Q_j + Q_j^* = 0, j = 1,2,\ldots,n$: n independent Equations of Motion

© Prof. Yong-Hwa Park, KAIST

Ex. 2.5: Dynamic Equilibrium Problem

(By both Newton's approach and Generalized principle of D'Alembert)

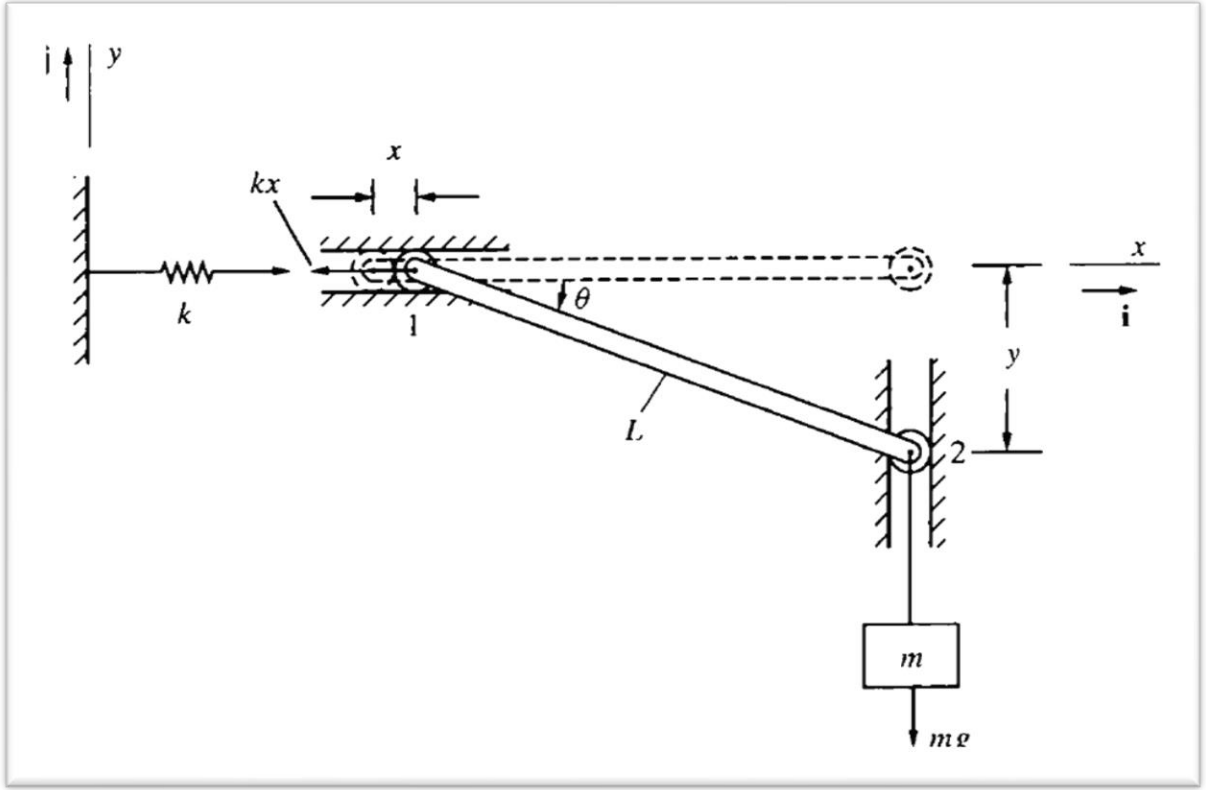

Bar: massless

x =0 when θ =0.

Consider inertial of mass m

Problem:

Equation of motion for θ?

© Prof. Yong-Hwa Park, KAIST

Approach 1: By **Newton's vector mechanics** (Given: k, m, L, g, Obtain : EOM of θ)

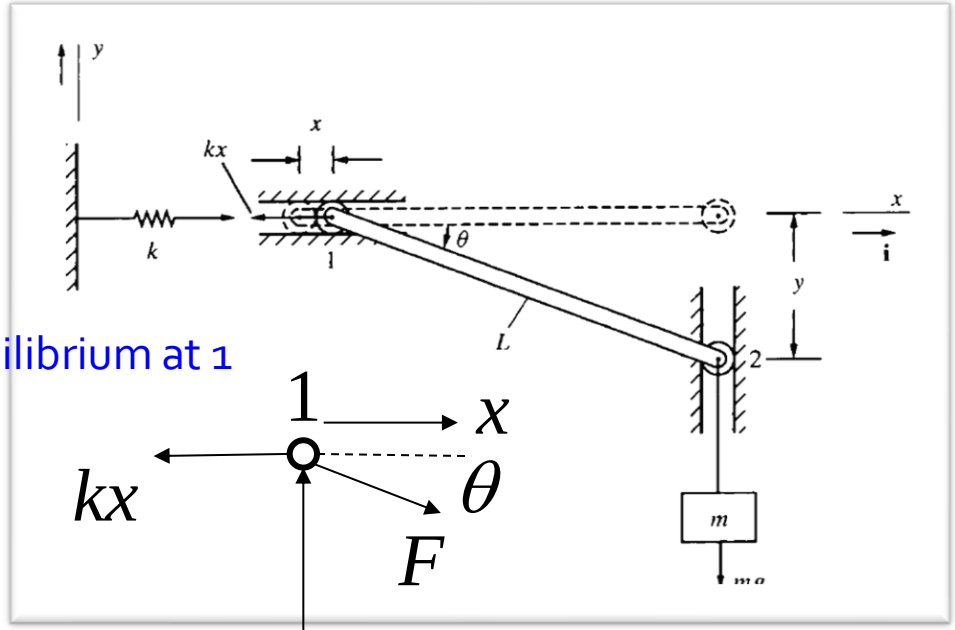

Equilibrium at 1

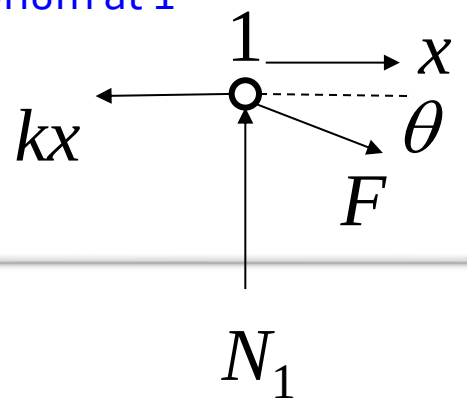

$$\begin{cases} F\cos\theta - kx = 0 \\ N_1 - F\sin\theta = 0 \end{cases}$$

Geometric constraints:

$$x = L(1-\cos\theta),\ y = -L\sin\theta$$

Equilibrium at 2 and mass m

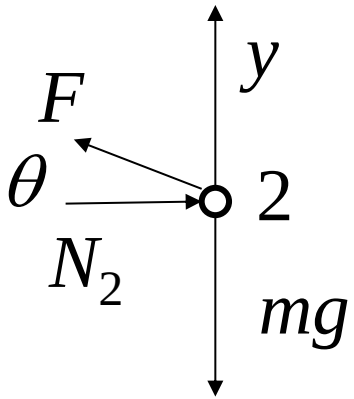

$$\begin{cases} N_2 - F\cos\theta = 0 \\ F\sin\theta - mg = m\ddot{y} \end{cases}$$

© Prof. Yong-Hwa Park, KAIST

Solution procedure : solving for θ and linearization:

$$
\begin{cases}
F\cos\theta - kx = 0 \\
N_1 - F\sin\theta = 0 \\
N_2 - F\cos\theta = 0 \\
F\sin\theta - mg = m\ddot{y} \\
\qquad \downarrow\Leftarrow x = L(1-\cos\theta),\ y = -L\sin\theta \\
\ddot{\theta}\cos\theta - \dot{\theta}^2\sin\theta + \dfrac{k}{m}\tan\theta(1-\cos\theta) - \dfrac{g}{L} = 0: \text{ Nonlinear ODE} \Rightarrow \tan\theta_0(1-\cos\theta_0) = \dfrac{mg}{kL} \text{ at equilibrium} \\
\qquad \downarrow\Leftarrow \text{Perturb \& linearize: } \theta = \theta_0 + \theta_1(t), \text{ where } \theta_1 \ll \theta_0 \\
\ddot{\theta}_1 + \dfrac{k}{m}(1-\cos\theta_0)\theta_1 + \dfrac{k}{m}\tan\theta_0(1-\cos\theta_0) - \dfrac{g}{L} = 0 \\
\qquad \downarrow\Leftarrow \tan\theta_0(1-\cos\theta_0) = \dfrac{mg}{kL} \text{ at equilibrium} \\
\ddot{\theta}_1 + \dfrac{k}{m}(1-\cos\theta_0)\theta_1(t) = 0: \text{ Linearized eq. of motion (You check!)}
\end{cases}
$$

© Prof. Yong-Hwa Park, KAIST

Approach 2: By **Generalized principle of D'Alembert** (Given: k, m, L, g, Obtain : EOM of θ)

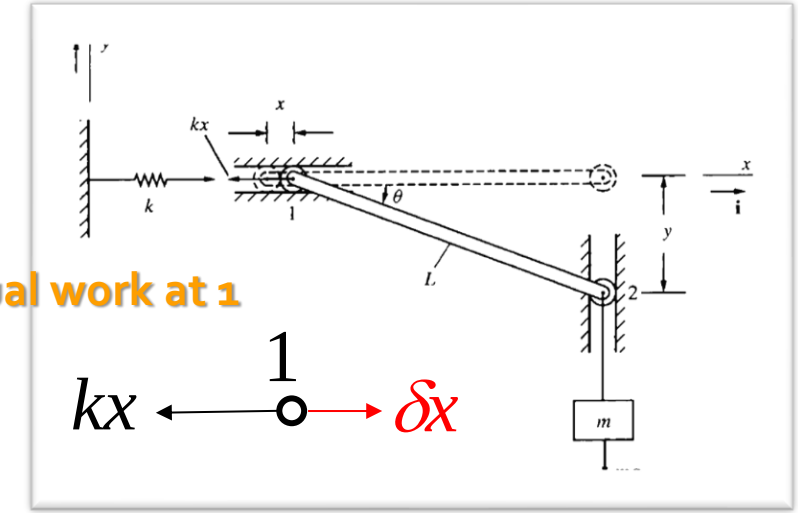

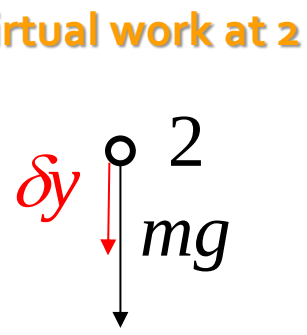

$$\mathbf{F}_1 = -kx\mathbf{i}$$

$$\delta\mathbf{r}_1 = \delta x\mathbf{i}$$

$$\mathbf{F}_2 = -mg\mathbf{j} + m\ddot{y}\mathbf{j}$$

$$\delta\mathbf{r}_2 = -\delta y\mathbf{j}$$

$$\delta W = \sum_{i=1}^{2}\left(\boldsymbol{F}_i - m_i\ddot{\boldsymbol{r}}_i\right)\cdot\delta\boldsymbol{r}_i = -kx\delta x + mg\delta y - m\ddot{y}\delta y = 0$$

$$\downarrow \Leftarrow \begin{cases}\delta x = L\sin\theta\delta\theta \\ \delta y = -L\cos\theta\delta\theta\end{cases} \Leftarrow \begin{cases}x = L(1-\cos\theta) \\ y = -L\sin\theta\end{cases}$$

$$\Rightarrow \ddot{\theta}\cos\theta - \dot{\theta}^2\sin\theta + \frac{k}{m}\tan\theta(1-\cos\theta) - \frac{g}{L} = 0$$

How many equations and unknowns do we have now?

Did we have to include the internal force f_{ij} , *and constraint forces N_1, N_2*?

© Prof. Yong-Hwa Park, KAIST

Highlight 5

- We learned how Newtonian Vector Dynamics was transformed to **Analytical Dynamics** by introducing **generalized coordinates**, and **Principle of Virtual Work**.

- The **virtual displacements** are imaginary displacement of the system compatible with constraints.

- The **virtual work** is work done by applying the virtual displacements from the equilibrium position while the forces and constraints are not changed (**The virtual work done by external force is zero in equilibrium!**).

- The dynamic equilibrium (Equation of Motion) can be obtained by Generalized D'Alembert principle regarding inertial force and a component in force equilibrium equation.

© Prof. Yong-Hwa Park, KAIST